HSF Pb RoHS

SPECIFICATION

Current Rating:	3.0Amp
Insulation Resistance:	1000MΩ min
Contact Resistance:	20MΩ max
Withstand Voltage:	1000V AC/DC
Operating Temperature:	-40°C to +105°C
Contact Material:	Brass
Contact Plating:	Au or Sn Over Ni
Insulator Material:	PBT or PA6T+30%GF UL 94V-0

10P-18P Without Slot"B"and"A"
20P-58P With Slot"B",Without Slot"A",
60P-64P With Slot"B"and"A"

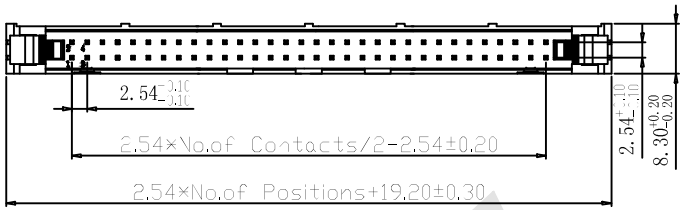

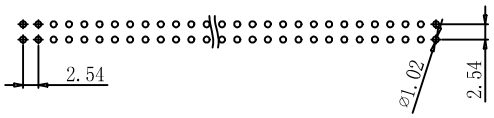

Recommended P.C.B Layout(Top Side)
(PCB BOARD TOLERANCE±0.05)

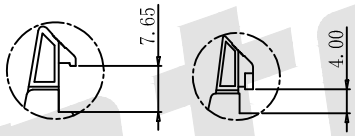

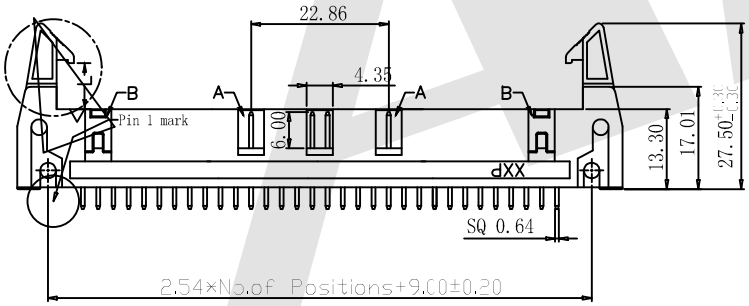

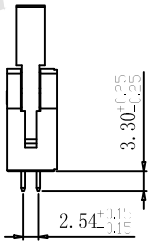

Ordering Code:

LHDS01 - ① X - ② X - ③ X - ④ X - ⑤ X - ⑥ X - ⑦

① Series No:

② No.of Contacts
6 8 10 12
14 16 18 20
24 26 30 34
40 50 60 64

③ Contact Plating:
G0:Gold flash S0:Selective
G1:3U" Gold S1:Selective 3u"
G2:5u" Gold S2:Selective 5u"
G3:10u "Gold S3:Selective 10u"
G4:15u" Gold S4:Selective 15u"
G5:30u" Gold S5:Selective 30u"
SN:Tin

④ Color Insulator
B:Black
U:Blue
G:Gray

⑤ Insulator Material
A:PBT
B:PA6T
C:LCP
D:PA46
E:PA9T

⑥ Packing
A:Tray
B:Bag
T:Tube
U:Tube+CAP
R:Tape&Reel
W:Tape&Reel+CAP

⑦ A:Short Latch
B:Long Latch
C:Without Latch

REV	DESCRIPTION	DATE

Unless Otherwise specified tolerance
X. ±0.35 X.XX: ±0.20
X.X: ±0.25 X.XXX: ±0.15

SCALE: As Shown	UNIT: mm
DRAW YG ZHONG	DATE 01/05/2016
CHECK BobYang	DATE 01/05/2016

3rd ANGLE PROJECTION

ANTENK ELECTRONICS CO,.LTD
Http://www.antenk.com
E-mail:sales@antenk.com

TITLE: 2.54mm Ejector Header 180°

DRAWING NO: LHDS01-XXXXXX

PRODUCT NO: LHDS01-XXXXXX

Antenk